Electrolux PROFESSIONAL

Modular Cooking Range Line 700XP Full Module Electric Bain Marie Top

ITEM #

MODEL #

NAME #

SIS #

AIA #



371097 (E7BMEHB000)	Electric bain-marie top with 1GN2/1 well
371145 (E7BMEHB00N)	Electric bain-marie top with 1GN2/1 well

Short Form Specification

Item No.

To be installed on open base installations, bridging supports or cantilever systems. Maintains cooked food at serving temperature by using hot water inside the well. Water temperature controlled by thermostat with maximum temperature of 90 °C. Exterior panels in stainless steel with Scotch Brite finish. One piece pressed work top in 1.5 mm thick stainless steel. Right-angled side edges to allow flush-fitting junction between units.

Main Features

- Unit to be mounted on open base cupboards, bridging supports or cantilever systems.
- Bain Marie used for keeping cooked food at serving temperatures using hot water.
- Incoloy armoured heating elements positioned beneath the base of the well.
- Filling water level is plate-marked on the side of the well.
- Unit to feature manual refill of well.
- Water temperature controlled by thermostat with maximum temperature value of 90 °C.
- Basin drained by tap on the front of the machine.
- All major compartments located in front of unit for ease of maintenance.
- Suitable for countertop installation.

Construction

- All exterior panels in Stainless Steel with Scotch Brite finishing.
- One piece pressed 1.5 mm work top in Stainless steel.
- Model has right-angled side edges to allow flush fitting joints between units, eliminating gaps and possible dirt traps.
- Water basin is seamlessly welded into the top of the appliance.

APPROVAL:

Optional Accessories

• Junction sealing kit	PNC 206086	❑
• Support for bridge type installation, 800mm	PNC 206137	❑
• Support for bridge type installation, 1000mm	PNC 206138	❑
• Support for bridge type installation, 1200mm	PNC 206139	❑
• Support for bridge type installation, 1400mm	PNC 206140	❑
• Support for bridge type installation, 1600mm	PNC 206141	❑
• Chimney upstand, 800mm	PNC 206304	❑
• Right and left side handrails	PNC 206307	❑
• Back handrail 800 mm	PNC 206308	❑
• Stainless steel grid for free standing wide grills (700XP) (only for 371097)	PNC 206410	❑
• Frontal handrail, 800mm	PNC 216047	❑
• Frontal handrail, 1200mm	PNC 216049	❑
• Frontal handrail, 1600mm	PNC 216050	❑
• Large handrail - portioning shelf, 800mm	PNC 216186	❑
• 2 side covering panels for top appliances	PNC 216277	❑
• Drilled false bottom full module for bain-marie	PNC 921623	❑
• Water filling tap for bain-marie top	PNC 921627	❑

The company reserves the right to make modifications to the products without prior notice. All information correct at time of printing.

Modular Cooking Range Line 700XP Full Module Electric Bain Marie Top

Front

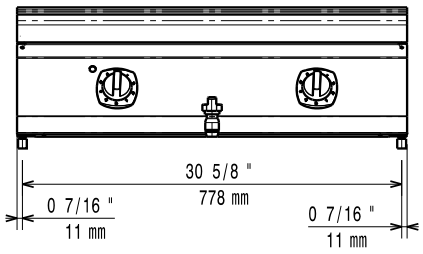

Side

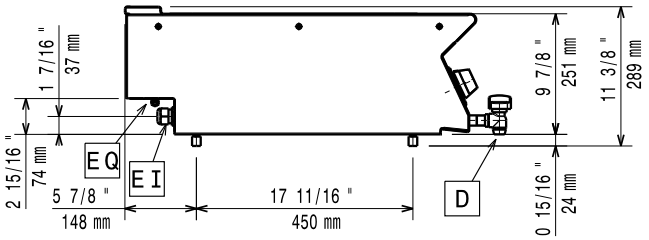

D = Drain
EI = Electrical inlet (power)
EQ = Equipotential screw

Top

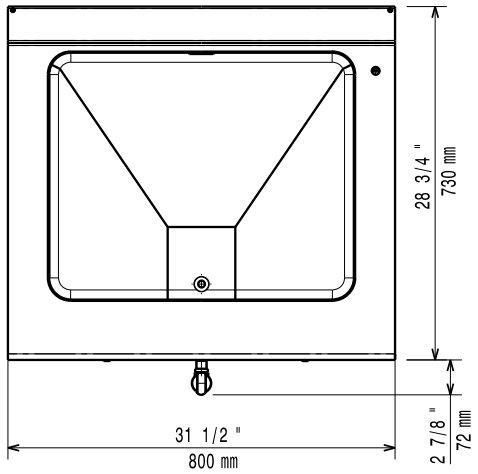

Electric

Supply voltage:	
	380-400 V/2N ph/50-60 Hz
371097 (E7BMEHB000)	
371145 (E7BMEHB00N)	230 V/3 ph/50/60 Hz
Total Watts:	3 kW

Water:

Water Drain:	
371097 (E7BMEHB000)	50 mm

Key Information:

If appliance is set up or next to or against temperature sensitive furniture or similar, a safety gap of approximately 150 mm should be maintained or some form of heat insulation fitted.

Usable well dimensions (width):	630 mm
Usable well dimensions (height):	156 mm
Usable well dimensions (depth):	510 mm
Thermostat Range:	30 °C MIN; 90 °C MAX
Net weight:	27 kg
Shipping weight:	35 kg
Shipping height:	
371097 (E7BMEHB000)	520 mm
371145 (E7BMEHB00N)	540 mm
Shipping width:	820 mm
Shipping depth:	860 mm
Shipping volume:	
371097 (E7BMEHB000)	0.37 m³
371145 (E7BMEHB00N)	0.38 m³
[NOT TRANSLATED]	
371097 (E7BMEHB000)	EBM78
371145 (E7BMEHB00N)	N7BE1

The company reserves the right to make modifications to the products without prior notice. All information correct at time of printing.

2026.11.20